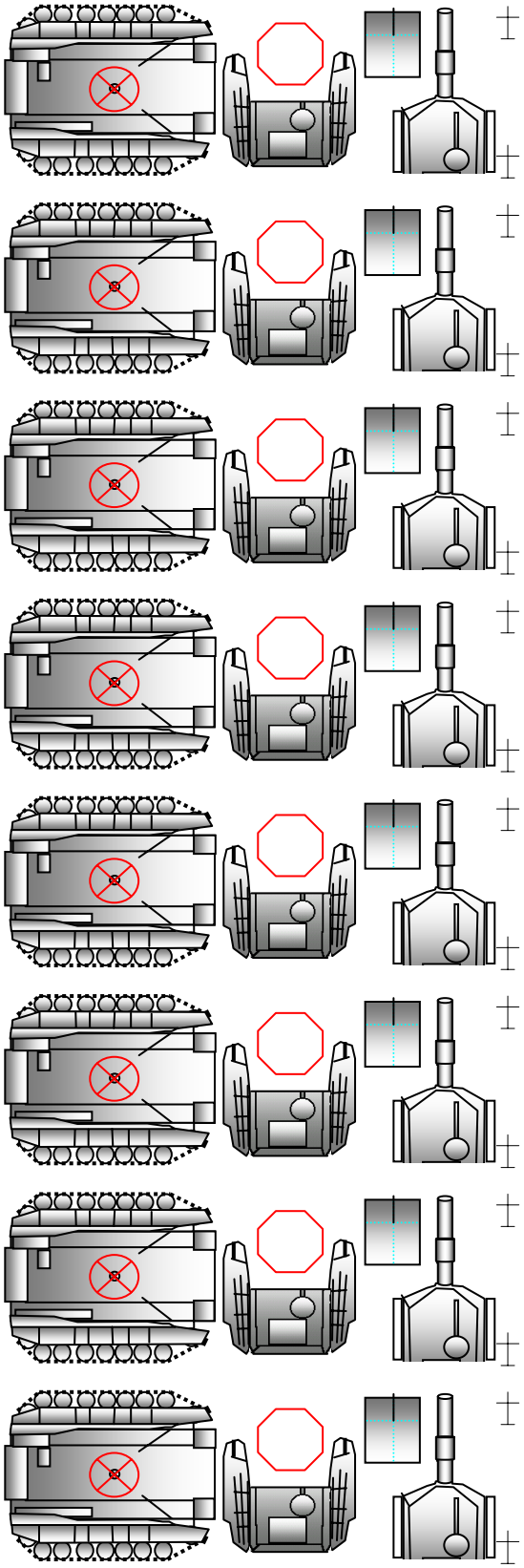

© 2006 by Glenn V. Domingo & Justin W. Gramm
Permission granted to reproduce for personal use.